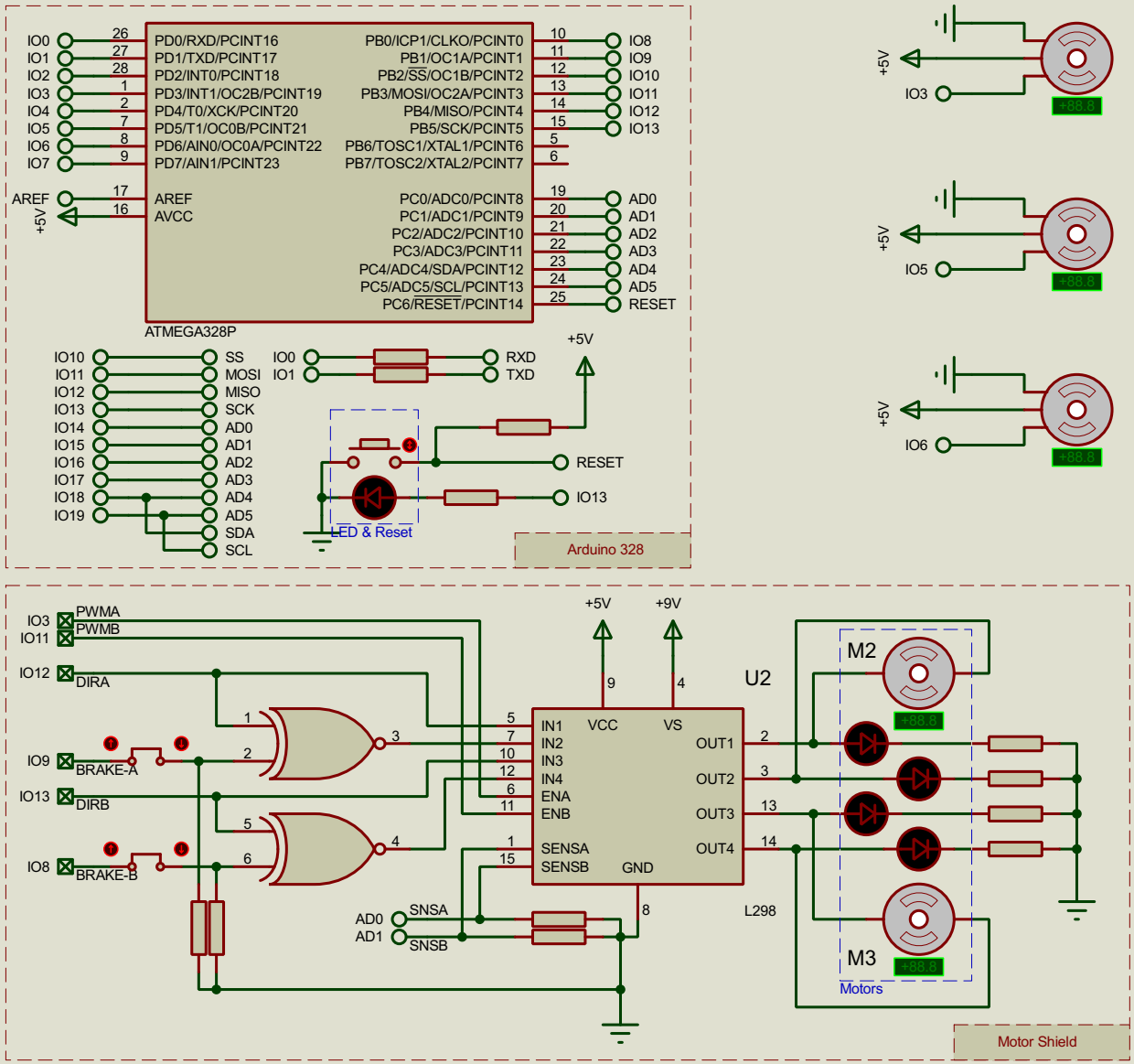
ATMEGA328P
PD0/RXD/PCINT16
PD1/TXD/PCINT17
PD2/INT0/PCINT18
PD3/INT1/OC2B/PCINT19
PD4/T0/XCK/PCINT20
PD5/T1/OC0B/PCINT21
PD6/AIN0/OC0A/PCINT22
PD7/AIN1/PCINT23
PB0/ICP1/CLKO/PCINT0
PB1/OC1A/PCINT1
PB2/SS/OC1B/PCINT2
PB3/MOSI/OC2A/PCINT3
PB4/MISO/PCINT4
PB5/SCK/PCINT5
PB6/TOSC1/XTAL1/PCINT6
PB7/TOSC2/XTAL2/PCINT7
AREF
AVCC
PC0/ADC0/PCINT8
PC1/ADC1/PCINT9
PC2/ADC2/PCINT10
PC3/ADC3/PCINT11
PC4/ADC4/SDA/PCINT12
PC5/ADC5/SCL/PCINT13
PC6/RESET/PCINT14
LED & Reset
Arduino 328
IN1
IN2
IN3
IN4
ENA
ENB
SENSA
SENSB
VCC
VS
GND
OUT1
OUT2
OUT3
OUT4
U2
L298
M2
M3
Motors
Motor Shield
BRAKE-A
BRAKE-B
DIRA
DIRB
PWMA
PWMB
SNSA
SNSB
+5V
+9V
+88.8

+5V
IO3
IO5
IO6
+88.8

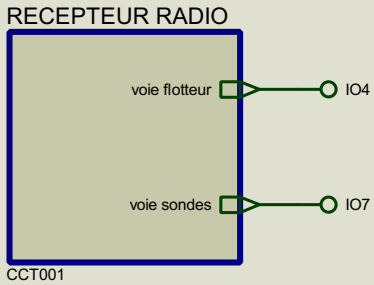
RECEPTEUR RADIO
voie flotteur
voie sondes
IO4
IO7
CCT001